DRG No.	REMOVE BURRS AND SHARP EDGES	IF IN DOUBT ASK	DO NOT SCALE	THIRD ANGLE PROJECTION
PX10813-E				

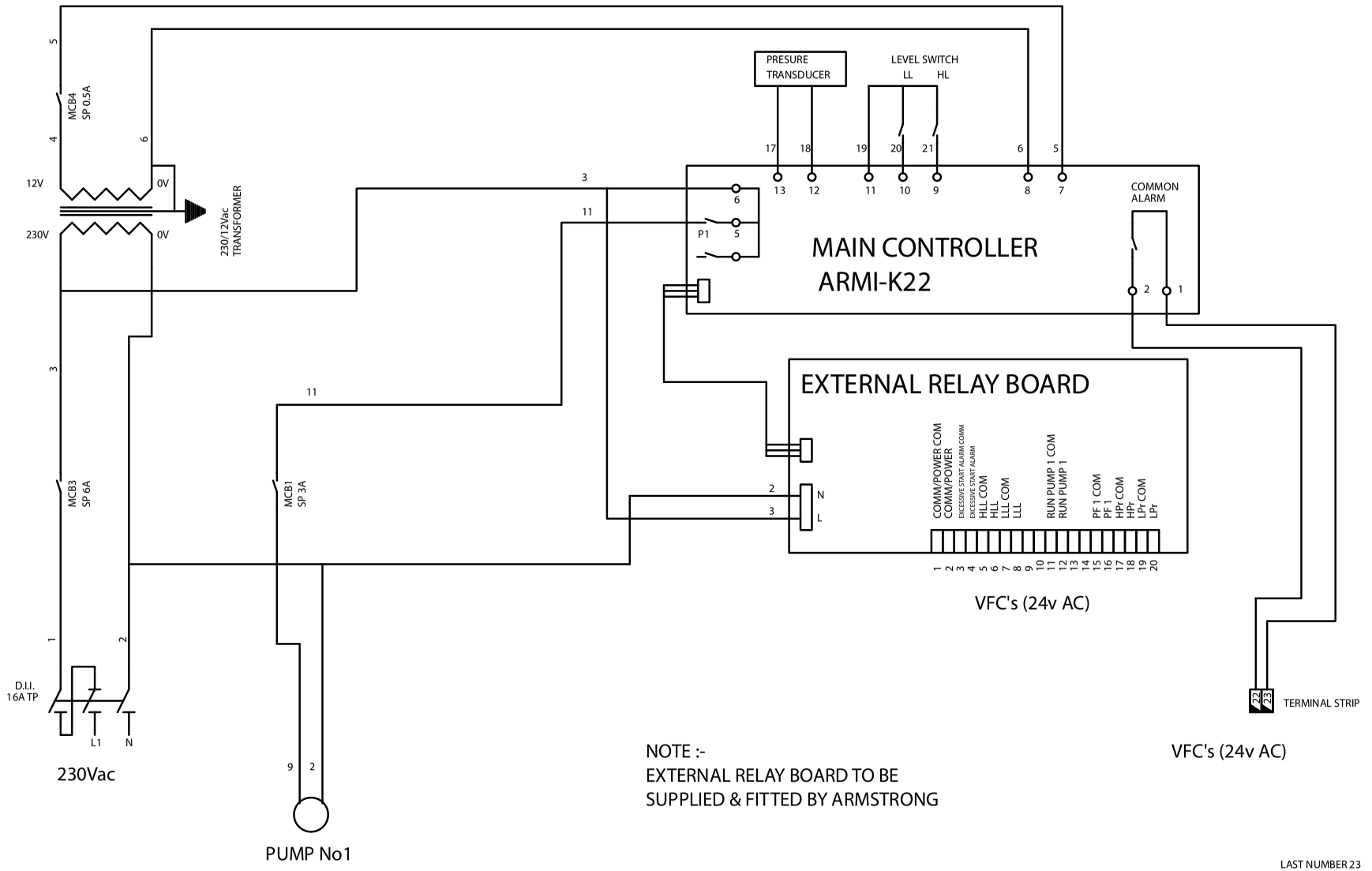

NOTE :-
EXTERNAL RELAY BOARD TO BE
SUPPLIED & FITTED BY ARMSTRONG

LAST NUMBER 23

LAST MODIFICATION DETAILS			
SEE ECO 8700 FUSE F1 0.5A REPLACED BY MCB4 SP 0.5A			
ISSUE E	DATE 29/10/2008	DRN BSD	
	CHK BSD	APP PK	

ALL DIMENSIONS IN mm
DRAWN TO BS308
WELDING SYMBOLS TO BS499
SURFACE FINISH SHOWN IN MICROMETERS
MACHINE WHERE SHOWN ✓
TO TOLERANCE + 0.3MM
UNLESS OTHERWISE STATED

JOB No.	PART No.	WEIGHT KG	FILE NAME
-	K2211/3750/11E	-	-
DESIGN No.	PATTERN No.	MATERIAL	MAT'L SPEC.
-	-	-	-

THIS DRAWING IS THE PRIVATE AND CONFIDENTIAL PROPERTY OF ARMSTRONG HOLDEN BROOKE PULLEN LTD. ALL COPYRIGHT, MANUFACTURING AND SALES RIGHTS RESERVED.

TITLE
SCHEMATIC WIRING DIAGRAM OF 3750 PRESSURISATION UNIT 1-P 1-SYS ENHANCED

DRG No.		
PX10813-E		
DATE 11/06/2008	DRN BSD	
CHK BSD	APP PK	
SCALE 1:1	SHEET 1 of 1	

ARMSTRONG
WENLOCK WAY, MANCHESTER. M12 5JL
TEL: +44 (0) 161 223 2223