ARMSTRONG®

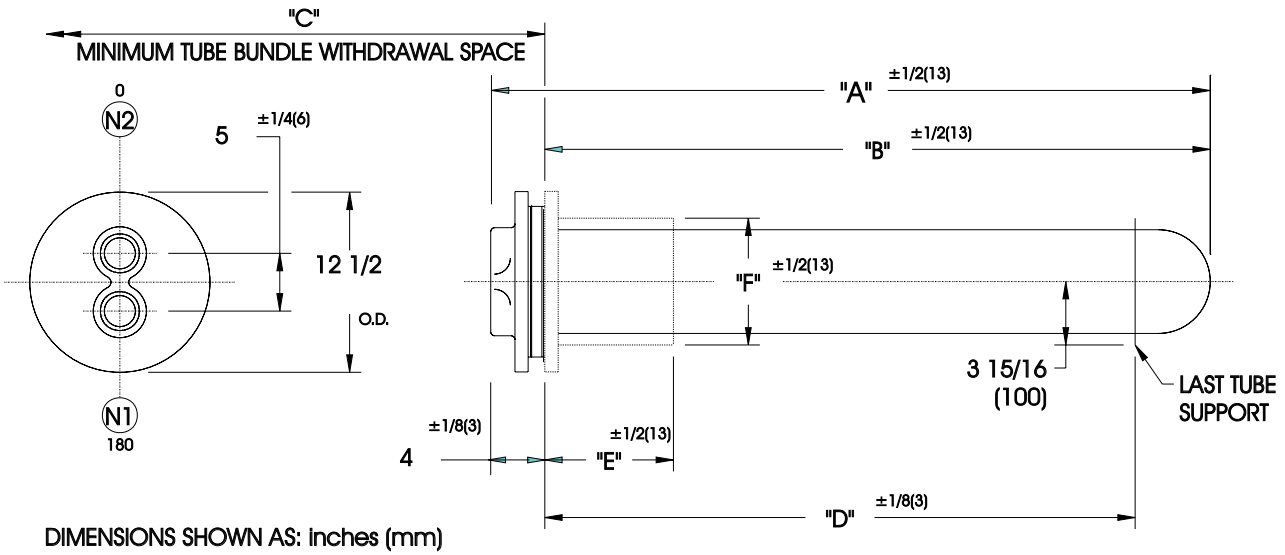

DIMENSIONS SHOWN AS: inches (mm)

EXCHANGER SIZE	DIMENSIONS							
	"A"		"B"		"C"		"D"	
	inches	mm	inches	mm	inches	mm	inches	mm
THW-812-2-1	16 -1/8	410	12-1/8	289	15	381	-	-
THW-818-2-1	22 -1/8	562	18-1/8	441	21	533	-	-
THW-824-2-1	28 -1/8	714	24-1/8	594	27	686	12-1/4	311
THW-830-2-1	34 -1/8	867	30-1/8	746	33	838	18-1/4	464
THW-836-2-1	40 -1/8	1019	36-1/8	899	39	991	24-1/4	616
THW-842-2-1	46 -1/8	1172	42-1/8	1051	45	1143	30-1/4	768
THW-848-2-1	52 -1/8	1324	48-1/8	1203	51	1295	36-1/4	921
THW-854-2-1	58 -1/8	1476	54-1/8	1356	57	1448	42-1/4	1073
THW-860-2-1	64 -1/8	1629	60-1/8	1508	63	1600	48-1/4	1226
THW-866-2-1	70 -1/8	1781	66-1/8	1680	69	1753	54-1/4	1378
THW-872-2-1	76 -1/8	1934	72-1/8	1832	75	1905	60-1/4	1530
THW-878-2-1	82 -1/8	2086	78-1/8	1984	81	2057	66-1/4	1683
THW-884-2-1	88 -1/8	2238	84-1/8	2137	87	2210	72-1/4	1835
THW-890-2-1	94 -1/8	2391	90-1/8	2289	93	2362	78-1/4	1988
THW-896-2-1	100 -1/8	2543	96-1/8	2442	99	2515	84-1/4	2140
THW-8102-2-1	106 -1/8	2696	102-1/8	2594	105	2667	90-1/4	2292
THW-8108-2-1	112 -1/8	2848	108-1/8	4646	111	2819	96-1/4	2445
THW-8114-2-1	118 -1/8	3000	114-1/8	2899	117	2972	102-1/4	2597
THW-8120-2-1	124 -1/8	3153	120-1/8	3051	123	3124	108-1/4	2750
THW-8126-2-1	130 -1/8	3305	126-1/8	3204	129	3277	114-1/4	2902
THW-8132-2-1	136 -1/8	3458	132-1/8	3356	135	3429	120-1/4	3054
THW-8138-2-1	142 -1/8	3610	138-1/8	3508	141	3581	126-1/4	3207

NOZZLE SCHEDULE

N1	INLET	3" NPT	(76)
N2	OUTLET	3" NPT	(76)

COLLAR ASSEMBLY

	STANDARD	OVS. FOR STONE LINING
"E"	8-5/8" (219)	10-3/4" (273)
"F"	8" (203)	8-1/2" (216)

DESIGN CONDITIONS

	TUBES	
DESIGN PRESSURE	150 PSIG	1034 KPa
DESIGN TEMPERATURE	375 F	191 C
M.D.M.T.	35 F	1.7 C
HYD. TEST PRESSURE	300 PSIG	2068 KPa

NOTES:
1. COLLAR ASSEMBLY SUPPLIED SEPARATELY.
2. FABRICATED TO ASME CODE SECTION VIII DIVISION 1 AND LATEST ADDENDA.
3. DRAWING IS NOT TO SCALE.
4. ALL DIMN'S 1/8 (3) UNLESS OTHERWISE SHOWN.
5. DIMENSIONS SHOWN AS: in.(mm)

CUSTOMER:
LOCATION:

ENGINEER :
ORDER No.:
PROJECT/JOB:
LOCATION:

TAG:
QUOTE #

TITLE	ARMSTRONG	NUMBER	REV.
G.A. 150 LB. TANK HEATERS	TORONTO - CANADA TEL : (416) 755-2291 · MONTREAL - CANADA TEL : (514) 421-2424 · BUFFALO - N. Y. TEL: (716) 693-8813 · COLCHESTER - U.K. TEL: (44) 120-657-9491	Thw-8-2P-1	
DATE : 24/05/95 BY : D.C.R			

© S.A. Armstrong Limited 1999