ARMSTRONG®

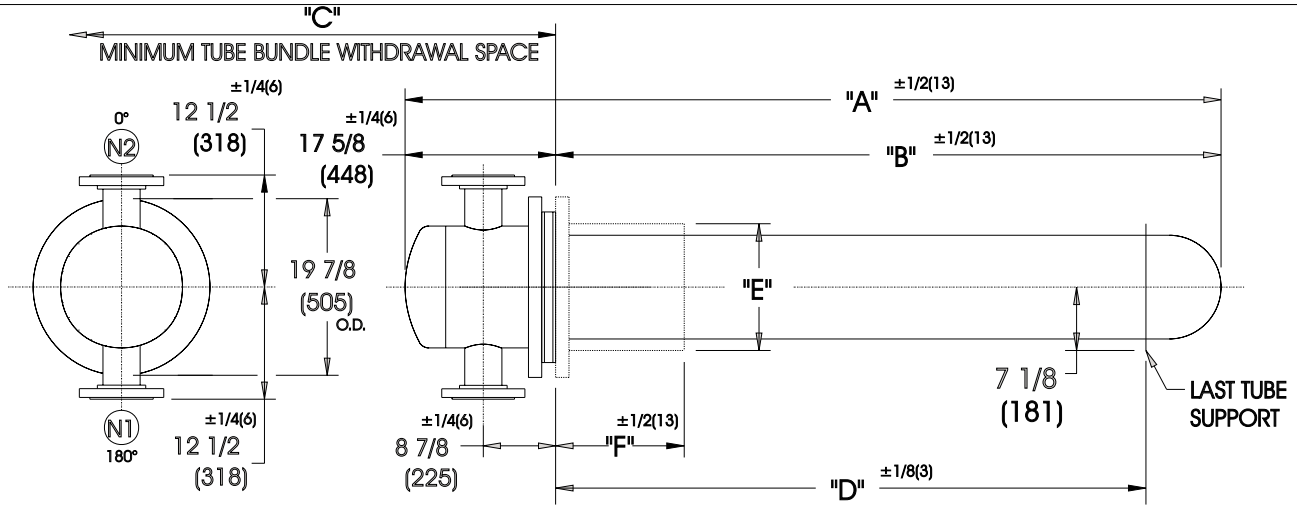

DIMENSIONS SHOWN AS: Inches (mm)

EXCHANGER SIZE	DIMENSIONS							
	"A"		"B"		"C"		"D"	
	inches	mm	inches	mm	inches	mm	inches	mm
THW-1636-2-4	53 -1/8	1349	35-1/2	902	38	965	24-1/2	622
THW-1642-2-4	59 -1/8	1502	41-1/2	1054	44	1118	30-1/2	775
THW-1648-2-4	65 -1/8	1654	47-1/2	1207	50	1270	36-1/2	927
THW-1654-2-4	71 -1/8	1807	53-1/2	1359	56	1422	42-1/2	1080
THW-1660-2-4	77 -1/8	1959	59-1/2	1511	62	1575	48-1/2	1232
THW-1666-2-4	83 -1/8	2111	65-1/2	1664	68	1727	54-1/2	1384
THW-1672-2-4	89 -1/8	2264	71-1/2	1816	74	1880	60-1/2	1537
THW-1678-2-4	95 -1/8	2416	77-1/2	1969	80	2032	66-1/2	1689
THW-1684-2-4	101-1/8	2569	83-1/2	2121	86	2184	72-1/2	1842
THW-1690-2-4	107 -1/8	2721	89-1/2	2273	92	2337	78-1/2	1994
THW-1696-2-4	113 -1/8	2873	95-1/2	2426	98	2489	84-1/2	2146
THW-16102-2-4	119 -1/8	3026	101-1/2	2578	104	2642	90-1/2	2299
THW-16108-2-4	125 -1/8	3178	107-1/2	2731	110	2794	96-1/2	2451
THW-16114-2-4	131 -1/8	3331	113-1/2	2883	116	2946	102-1/2	2604
THW-16120-2-4	137 -1/8	3483	119-1/2	3035	122	3099	108-1/2	2756
THW-16126-2-4	143 -1/8	3635	125-1/2	3188	128	3251	114-1/2	2908
THW-16132-2-4	149 -1/8	3788	131-1/2	3340	134	3404	120-1/2	3061
THW-16138-2-4	155 -1/8	3940	137-1/2	3493	140	3556	126-1/2	3213
THW-16144-2-4	161 -1/8	4093	143-1/2	3645	146	3708	132-1/2	3366
THW-16150-2-4	167 -1/8	4245	149-1/2	3797	152	3861	138-1/2	3518
THW-16156-2-4	173 -1/8	4397	155-1/2	3950	158	4013	144-1/2	3670
THW-16162-2-4	179 -1/8	4550	161-1/2	4102	164	4166	150-1/2	3823

NOZZLE SCHEDULE

N1	INLET	6" FLG	(152)
N2	OUTLET	6" FLG	(152)
N3	DRAIN	1/2" NPT	(13)

COLLAR ASSEMBLY

	STANDARD	OVS. FOR STONE LINING
"E"	16 (406)	18 (457)
"F"	12 (305)	12 1/2 (318)

DESIGN CONDITIONS

	TUBES	
DESIGN PRESSURE	150 PSIG	1034 KPa
DESIGN TEMPERATURE	375 F	191 C
M.D.M.T.	40 F	4.4 C
HYD. TEST PRESSURE	225 PSIG	1551 KPa

NOTES:
1. COLLAR ASSEMBLY SUPPLIED SEPARATELY.
2. FABRICATED TO ASME CODE SECTION VIII DIVISION 1 AND LATEST ADDENDA.
3. DRAWING IS NOT TO SCALE.
4. ALL DIMN'S 1/8 (3) UNLESS OTHERWISE SHOWN.
5. DIMENSIONS SHOWN AS: In.(mm)

CUSTOMER:
LOCATION:

ENGINEER :

ORDER No.:

PROJECT/JOB:
LOCATION:

TAG:
QUOTE #

TITLE G.A 150 LB. TANK HEATERS

DATE : 24/05/95 BY : D.C.R

A R M S T R O N G

TORONTO - CANADA TEL : (416) 755-2291
MONTREAL - CANADA TEL : (514) 421-2424
BUFFALO - N. Y. TEL: (716) 693-8813
COLCHESTER - U.K. TEL: (44) 120-657-9491

NUMBER Thw-16-2P-4

REV.

© S.A. Armstrong Limited 1999