ARMSTRONG®

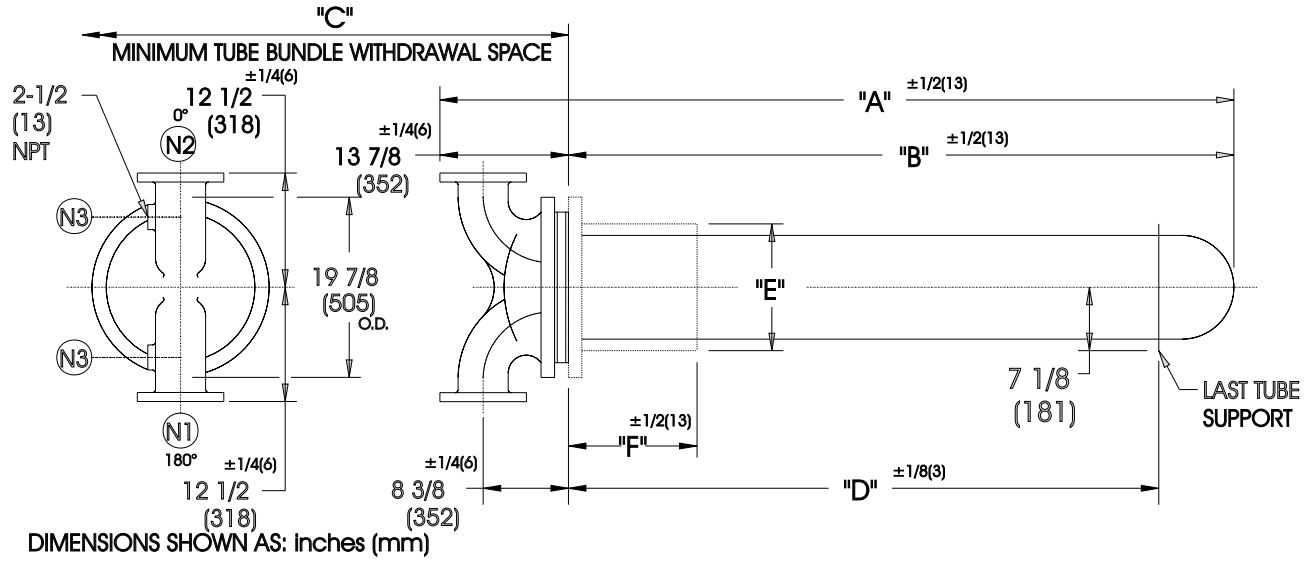

DIMENSIONS SHOWN AS: inches (mm)

EXCHANGER SIZE	DIMENSIONS							
	"A"		"B"		"C"		"D"	
	inches	mm	inches	mm	inches	mm	inches	mm
THW-1636-2-2	49-3/8	1254	35-1/2	902	38	965	24-1/2	622
THW-1642-2-2	55-3/8	1407	41-1/2	1054	44	1118	30-1/2	775
THW-1648-2-2	61-3/8	1559	47-1/2	1207	50	1270	36-1/2	927
THW-1654-2-2	67-3/8	1711	53-1/2	1359	56	1422	42-1/2	1080
THW-1660-2-2	73-3/8	1864	59-1/2	1511	62	1575	48-1/2	1232
THW-1666-2-2	79-3/8	2016	65-1/2	1664	68	1727	54-1/2	1384
THW-1672-2-2	85-3/8	2169	71-1/2	1816	74	1880	60-1/2	1537
THW-1678-2-2	91-3/8	2321	77-1/2	1969	80	2032	66-1/2	1689
THW-1684-2-2	97-3/8	2473	83-1/2	2121	86	2184	72-1/2	1842
THW-1690-2-2	103-3/8	2626	89-1/2	2273	92	2337	78-1/2	1994
THW-1696-2-2	109-3/8	2778	95-1/2	2426	98	2489	84-1/2	2146
THW-16102-2-2	115-3/8	2931	101-1/2	2578	104	2642	90-1/2	2299
THW-16108-2-2	121-3/8	3083	107-1/2	2731	110	2794	96-1/2	2451
THW-16114-2-2	127-7/8	3235	113-1/2	2883	116	2946	102-1/2	2604
THW-16120-2-2	133-3/8	3388	119-1/2	3035	122	3099	108-1/2	2756
THW-16126-2-2	139-3/8	3540	125-1/2	3188	128	3251	114-1/2	2908
THW-16132-2-2	145-3/8	3693	131-1/2	3340	134	3404	120-1/2	3061
THW-16138-2-2	151-3/8	3845	137-1/2	3493	140	3556	126-1/2	3213
THW-16144-2-2	157-3/8	3997	143-1/2	3645	146	3708	132-1/2	3366
THW-16150-2-2	163-3/8	4150	149-1/2	3797	152	3861	138-1/2	3518
THW-16156-2-2	169-3/8	4302	155-1/2	3950	158	4013	144-1/2	3670
THW-16162-2-2	175-3/8	4455	161-1/2	4102	164	4166	150-1/2	3823

NOZZLE SCHEDULE

N1	INLET	6" (152) FLG
N2	OUTLET	6" (152) FLG
N3	DRAIN	1/2" NPT (13)

COLLAR ASSEMBLY

	STANDARD	OVS. FOR STONE LINING
"E"	16 (406)	18 (457)
"F"	12 (305)	12 1/2 (318)

DESIGN CONDITIONS

	TUBES	
DESIGN PRESSURE	150 PSIG	1034 KPa
DESIGN TEMPERATURE	300 F	149 C
M.D.M.T.	40 F	4.4 C
HYD. TEST PRESSURE	300 PSIG	2068 KPa

NOTES:
1. COLLAR ASSEMBLY SUPPLIED SEPARATELY.
2. FABRICATED TO ASME CODE SECTION VIII DIVISION 1 AND LATEST ADDENDA.
3. DRAWING IS NOT TO SCALE.
4. ALL DIMN'S 1/8 (3) UNLESS OTHERWISE SHOWN.
5. DIMENSIONS SHOWN AS: in.(mm)

CUSTOMER:
LOCATION:

ENGINEER :
ORDER No.:
PROJECT/JOB:
LOCATION:

TAG:
QUOTE #

TITLE G.A. 150 LB. TANK HEATERS	ARMSTRONG	NUMBER	REV.
DATE : 24/05/95 BY : D.C.R	TORONTO - CANADA TEL : (416) 755-2291 · MONTREAL - CANADA TEL : (514) 421-2424 · BUFFALO - N. Y. TEL: (716) 693-8813 · COLCHESTER - U.K. TEL: (44) 120-657-9491	Thw-16-2P=2	

© S.A. Armstrong Limited 1999