ARMSTRONG®

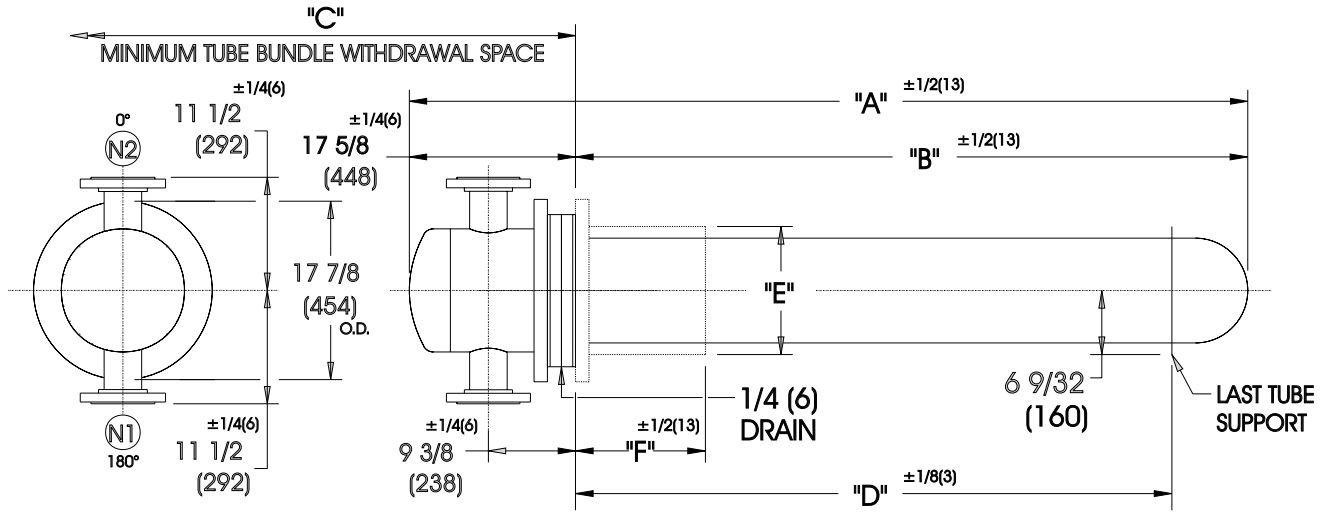

DIMENSIONS SHOWN AS: inches (mm)

EXCHANGER SIZE	DIMENSIONS							
	"A"		"B"		"C"		"D"	
	Inches	mm	Inches	mm	Inches	mm	Inches	mm
THWX-1436-2-4	53 -3/8	1356	35-3/4	908	38	965	24-1/2	622
THWX-1442-2-4	59 -3/8	1508	41-3/4	1060	44	1118	30-1/2	775
THWX-1448-2-4	65 -3/8	1661	47-3/4	1213	50	1270	36-1/2	927
THWX-1454-2-4	71 -3/8	1813	53-3/4	1365	56	1422	42-1/2	1080
THWX-1460-2-4	77 -3/8	1965	59-3/4	1518	62	1575	48-1/2	1232
THWX-1466-2-4	83 -3/8	2118	65-3/4	1670	68	1727	54-1/2	1384
THWX-1472-2-4	89 -3/8	2270	71-3/4	1822	74	1880	60-1/2	1537
THWX-1478-2-4	95 -3/8	2423	77-3/4	1975	80	2032	66-1/2	1689
THWX-1484-2-4	101 -3/8	2575	83-3/4	2127	86	2184	72-1/2	1842
THWX-1490-2-4	107 -3/8	2727	89-3/4	2280	92	2337	78-1/2	1994
THWX-1496-2-4	113 -3/8	2880	95-3/4	2432	98	2489	84-1/2	2146
THWX-14102-2-4	119 -3/8	3032	101-3/4	2584	104	2642	90-1/2	2299
THWX-14108-2-4	125 -3/8	3185	107-3/4	2737	110	2794	96-1/2	2451
THWX-14114-2-4	131 -3/8	3337	113-3/4	2889	116	2946	102-1/2	2604
THWX-14120-2-4	137 -3/8	3489	119-3/4	3042	122	3099	108-1/2	2756
THWX-14126-2-4	143 -3/8	3642	125-3/4	3194	128	3251	114-1/2	2908
THWX-14132-2-4	149 -3/8	3794	131-3/4	3346	134	3404	120-1/2	3061
THWX-14138-2-4	155 -3/8	3947	137-3/4	3499	140	3556	126-1/2	3213
THWX-14144-2-4	161 -3/8	4099	143-3/4	3651	146	3708	132-1/2	3366
THWX-14150-2-4	167 -3/8	4251	149-3/4	3804	152	3861	138-1/2	3518
THWX-14156-2-4	173 -3/8	4404	155-3/4	3956	158	4013	144-1/2	3670
THWX-14162-2-4	179 -3/8	4556	161-3/4	4108	164	4166	150-1/2	3823

NOZZLE SCHEDULE

N1	INLET	6" FLG	(152)
N2	OUTLET	6" FLG	(152)

COLLAR ASSEMBLY

	STANDARD	OVS. FOR STONE LINING
"E"	14" (356)	16" (406)
"F"	10-1/2" (267)	12" (305)

DESIGN CONDITIONS

	TUBES	
DESIGN PRESSURE	150 PSIG	1034 KPa
DESIGN TEMPERATURE	375 F	191 C
M.D.M.T.	40 F	4.4 C
HYD. TEST PRESSURE	225 PSIG	1551 KPa

NOTES:
1. COLLAR ASSEMBLY SUPPLIED SEPARATELY.
2. FABRICATED TO ASME CODE SECTION VIII DIVISION 1 AND LATEST ADDENDA.
3. DRAWING IS NOT TO SCALE.
4. ALL DIMN'S 1/8 (3) UNLESS OTHERWISE SHOWN.
5. DIMENSIONS SHOWN AS: in.(mm)

CUSTOMER:
LOCATION:

ENGINEER :
ORDER No.:
PROJECT/JOB:
LOCATION:

TAG:
QUOTE #

TITLE G.A. 150 LB. TANK HEATERS	ARMSTRONG	NUMBER	REV.
DATE : 24/05/95 BY : D.C.R	TORONTO - CANADA TEL : (416) 755-2291 · MONTREAL - CANADA TEL : (514) 421-2424 · BUFFALO - N. Y. TEL: (716) 693-8813 · COLCHESTER - U.K. TEL: (44) 120-657-9491	Thwx-14-2P-4	

© S.A. Armstrong Limited 1999