ARMSTRONG®

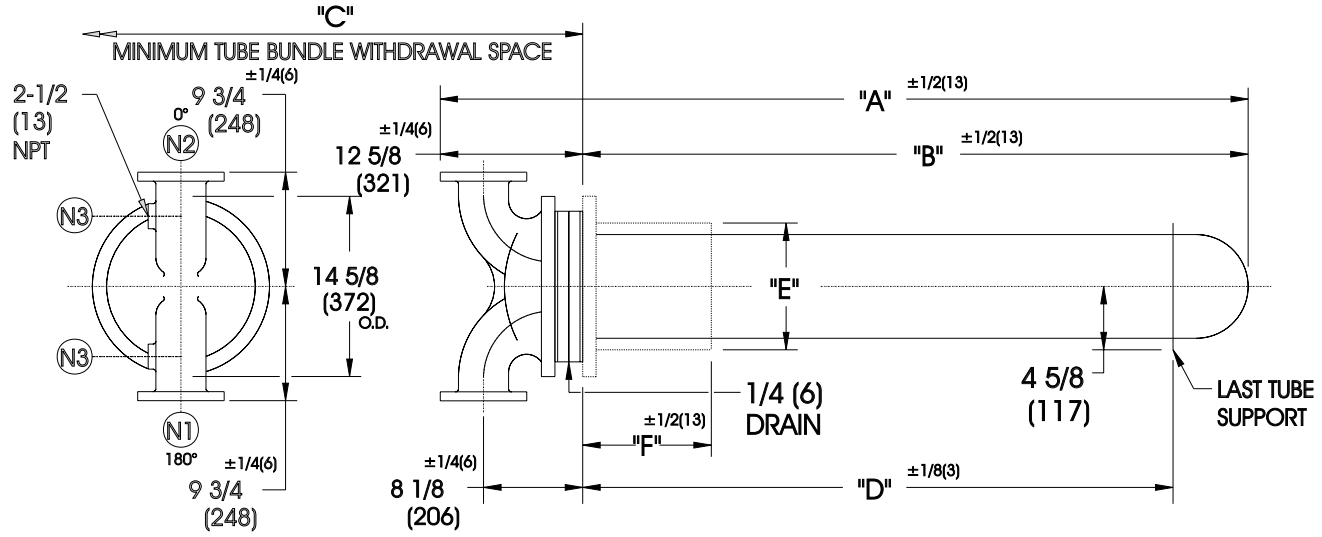

DIMENSIONS SHOWN AS: Inches (mm)

EXCHANGER SIZE	DIMENSIONS							
	"A"		"B"		"C"		"D"	
	inches	mm	inches	mm	inches	mm	inches	mm
THWX-1012-2-2	24 -3/8	619	11-3/4	298	14	356	-	-
THWX-1018-2-2	30 -3/8	772	17-3/4	451	20	508	-	-
THWX-1024-2-2	36 -3/8	924	23-3/4	603	26	660	12-1/4	311
THWX-1030-2-2	42 -3/8	1076	29-3/4	756	32	813	18-1/4	464
THWX-1036-2-2	48 -3/8	1229	35-3/4	908	38	965	24-1/4	616
THWX-1042-2-2	54 -3/8	1381	41-3/4	1060	44	1118	30-1/4	768
THWX-1048-2-2	60 -3/8	1534	47-3/4	1213	50	1270	36-1/4	921
THWX-1054-2-2	66 -3/8	1686	53-3/4	1365	56	1422	42-1/4	1073
THWX-1060-2-2	72 -3/8	1838	59-3/4	1518	62	1575	48-1/4	1226
THWX-1066-2-2	78 -3/8	1991	65-3/4	1670	68	1727	54-1/4	1378
THWX-1072-2-2	84 -3/8	2143	71-3/4	1822	74	1880	60-1/4	1530
THWX-1078-2-2	90 -3/8	2296	77-3/4	1975	80	2032	66-1/4	1683
THWX-1084-2-2	96 -3/8	2448	83-3/4	2127	86	2184	72-1/4	1835
THWX-1090-2-2	102 -3/8	2600	89-3/4	2280	92	2337	78-1/4	1988
THWX-1096-2-2	108-3/8	2753	95-3/4	2432	98	2489	84-1/4	2140
THWX-10102-2-2	114 -3/8	2905	101-3/4	2584	104	2642	90-1/4	2292
THWX-10108-2-2	120 -3/8	3058	107-3/4	2737	110	2794	96-1/4	2445
THWX-10114-2-2	126 -3/8	3210	113-3/4	2889	116	2946	102-1/4	2597
THWX-10120-2-2	132 -3/8	3362	119-3/4	3042	122	3099	108-1/4	2750
THWX-10126-2-2	138 -3/8	3515	125-3/4	3194	128	3251	114-1/4	2902
THWX-10132-2-2	144 -3/8	3667	131-3/4	3346	134	3404	120-1/4	3054
THWX-10138-2-2	150 -3/8	3820	137-3/4	3499	140	3556	126-1/4	3207
THWX-10144-2-2	156 -3/8	3972	143-3/4	3651	146	3708	132-1/4	3359
THWX-10150-2-2	162 -3/8	4124	149-3/4	3804	152	3861	138-1/4	3512

NOZZLE SCHEDULE

N1	INLET	4" FLG	(102)
N2	OUTLET	4" FLG	(102)
N3	DRAIN	1/2" NPT	(13)

COLLAR ASSEMBLY

	STANDARD	OVS. FOR STONE LINING
"E"	10-3/4" (273)	12-3/4" (324)
"F"	8-1/2" (216)	10" (254)

DESIGN CONDITIONS

	TUBES	
DESIGN PRESSURE	150 PSIG	1034 KPa
DESIGN TEMPERATURE	375 F	191 C
M.D.M.T.	35 F	1.7 C
HYD. TEST PRESSURE	300 PSIG	2068 KPa

NOTES:
1. COLLAR ASSEMBLY SUPPLIED SEPARATELY.
2. FABRICATED TO ASME CODE SECTION VIII DIVISION 1 AND LATEST ADDENDA.
3. DRAWING IS NOT TO SCALE.
4. ALL DIMN'S 1/8 (3) UNLESS OTHERWISE SHOWN.
5. DIMENSIONS SHOWN AS: In.(mm)

CUSTOMER:
LOCATION:

ENGINEER :
ORDER No.:
PROJECT/JOB:
LOCATION:

TAG:
QUOTE #

TITLE G.A. 150 LB. TANK HEATERS	ARMSTRONG	NUMBER	REV.
DATE : 24/05/95 BY : D.C.R	TORONTO - CANADA TEL : (416) 755-2291 · MONTREAL - CANADA TEL : (514) 421-2424 · BUFFALO - N. Y. TEL: (716) 693-8813 · COLCHESTER - U.K. TEL: (44) 120-657-9491	Thwx-10-2P-2	

© S.A. Armstrong Limited 1999