ARMSTRONG®

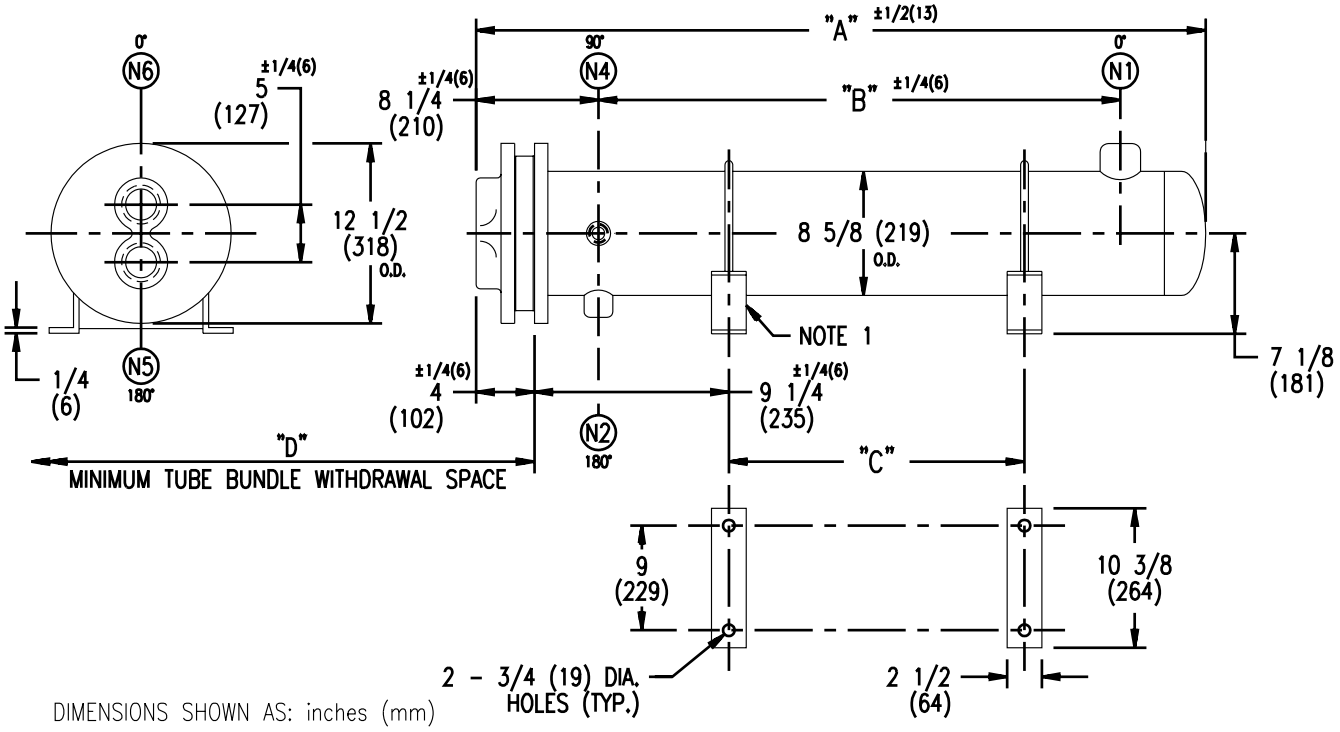

DIMENSIONS SHOWN AS: inches (mm)

EXCHANGER SIZE	DIMENSIONS											
	A		B		C		D		N1		N2	
	inches	mm	inches	mm	inches	mm	inches	mm	inches	mm	inches	mm
WS-82-2E1	40 1/2	1029	24 1/2	622	15	381	26	660	2	51	1	25
WS-83-2E1	52 1/2	1334	36 1/2	927	27	686	38	965	2 1/2	64	1	25
WS-84-2E1	64 1/2	1638	48 1/2	1232	39	991	50	1270	3	76	1	25

NOZZLE SCHEDULE

SERVICE	MARK	SHELL SIDE	MARK	TUBE SIDE
INLET	N1	AS PER TABLE	N5	3 (76) NPT
OUTLET	N2	AS PER TABLE	N6	3 (76) NPT
VENT	N4	3/4 (19) NPT		

NOTES:
1. SUPPORTS SUPPLIED ONLY IF SPECIFIED ON ORDER.
2. NOZZLE SIZES SHOWN ARE RECOMMENDED FOR MAXIMUM EXCHANGER LIFE.
3. FABRICATED TO ASME CODE SECTION VIII DIVISION 1 AND LATEST ADDENDA.
4. DRAWING IS NOT TO SCALE.
5. ALL DIMN'S ±1/8 (3) UNLESS OTHERWISE SHOWN.

DESIGN CONDITIONS

	SHELL		TUBES	
DESIGN PRESSURE	150 PSIG	1034 KPa	150 PSIG	1034 KPa
DESIGN TEMPERATURE	375 °F	191 °C	375 °F	191 °C
MIN. DESIGN METAL TEMP.	35 °F	1.7 °C	35 °F	1.7 °C
HYDRO. TEST PRESSURE	225 PSIG	1551 KPa	300 PSIG	2068 KPa
CONTENTS	STEAM		WATER	

CUSTOMER:
LOCATION:
ENGINEER:
ORDER No.:
PROJECT/JOB:
LOCATION:
TAG: (QUOTE #)

TITLE	ARMSTRONG	NUMBER	REV.
G.A. 150 LB. WS SERIES HEAT EXCHANGERS	TORONTO - CANADA TEL : (416) 755-2291 · MONTREAL - CANADA TEL ; (514) 421-2424 · BUFFALO - N. Y. TEL: (716) 693-8813 · COLCHESTER - U.K. TEL: (44) 120-657-9491	WS-8-2P-E1-(3)	
DATE: 12 / 01 / 94 BY: D.C.R.			

© S.A. Armstrong Limited 1999