ARMSTRONG®

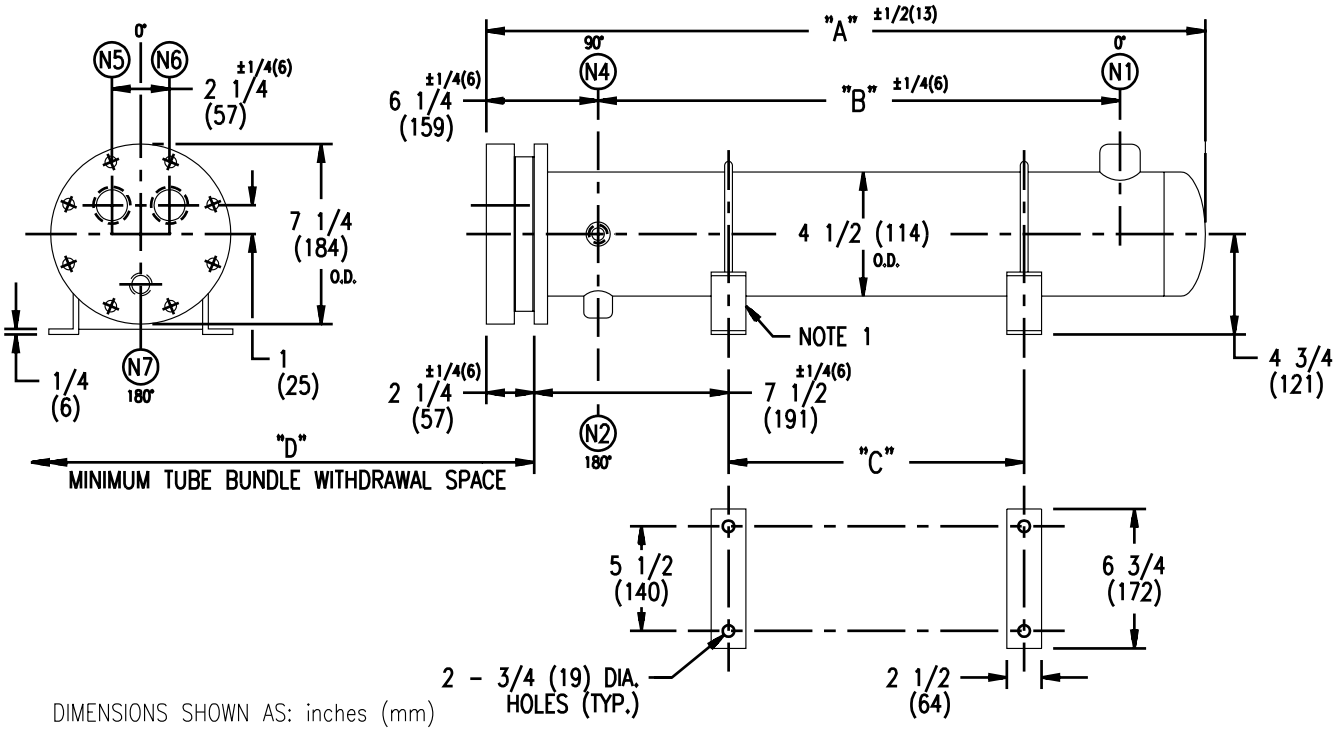

DIMENSIONS SHOWN AS: inches (mm)

EXCHANGER SIZE	DIMENSIONS											
	A		B		C		D		N1		N2	
	inches	mm	inches	mm	inches	mm	inches	mm	inches	mm	inches	mm
WS-42-4E3	35 1/4	895	23 1/4	591	16	406	26	660	2	51	1	25
WS-43-4E3	47 1/4	1200	35 1/4	895	28	711	38	965	2	51	1	25
WS-44-4E3	59 1/4	1505	47 1/4	1200	40	1016	50	1270	2	51	1	25
WS-45-4E3	71 1/4	1810	59 1/4	1505	52	1321	62	1575	2 1/2	64	1 1/4	32
WS-46-4E3	83 1/4	2115	71 1/4	1810	64	1626	74	1880	2 1/2	64	1 1/4	32
WS-47-4E3	95 1/4	2419	83 1/4	2115	76	1930	86	2184	2 1/2	64	1 1/4	32
WS-48-4E3	107 1/4	2724	95 1/4	2419	88	2235	98	2489	2 1/2	64	1 1/4	32
WS-49-4E3	119 1/4	3029	107 1/4	2724	100	2540	110	2794	2 1/2	64	1 1/4	32
WS-410-4E3	131 1/4	3334	119 1/4	3029	112	2845	122	3099	2 1/2	64	1 1/4	32
WS-411-4E3	143 1/4	3639	131 1/4	3334	124	3150	134	3404	2 1/2	64	1 1/4	32
WS-412-4E3	155 1/4	3943	143 1/4	3639	136	3454	146	3708	2 1/2	64	1 1/4	32

NOZZLE SCHEDULE

SERVICE	MARK	SHELL SIDE	MARK	TUBE SIDE
INLET	N1	AS PER TABLE	N5	1 (25) NPT
OUTLET	N2	AS PER TABLE	N6	1 (25) NPT
DRAIN			N7	1/2 (13) NPT
VENT	N4	3/4 (19) NPT		

NOTES:
1. SUPPORTS SUPPLIED ONLY IF SPECIFIED ON ORDER.
2. NOZZLE SIZES SHOWN ARE RECOMMENDED FOR MAXIMUM EXCHANGER LIFE.
3. FABRICATED TO ASME CODE SECTION VIII DIVISION 1 AND LATEST ADDENDA.
4. DRAWING IS NOT TO SCALE.
5. ALL DIMN'S ±1/8 (3) UNLESS OTHERWISE SHOWN.

DESIGN CONDITIONS

	SHELL		TUBES	
DESIGN PRESSURE	150 PSIG	1034 KPa	150 PSIG	1034 KPa
DESIGN TEMPERATURE	375 °F	191 °C	375 °F	191 °C
MIN. DESIGN METAL TEMP.	35 °F	1.7 °C	35 °F	1.7 °C
HYDRO. TEST PRESSURE	225 PSIG	1551 KPa	225 PSIG	1551 KPa
CONTENTS	STEAM		WATER	

CUSTOMER:
LOCATION:
ENGINEER:
ORDER No.:
PROJECT/JOB:
LOCATION:
TAG: (QUOTE #)

TITLE	ARMSTRONG	NUMBER	REV.
G.A. 150 LB. WS SERIES HEAT EXCHANGERS	TORONTO - CANADA TEL : (416) 755-2291 · MONTREAL - CANADA TEL : (514) 421-2424 · BUFFALO - N. Y. TEL: (716) 693-8813 · COLCHESTER - U.K. TEL: (44) 120-657-9491	WS-4-4P-E3	
DATE: 12 / 01 / 94 BY: D.C.R.			

© S.A. Armstrong Limited 1999