DRG No. - PX10762

REMOVE BURRS AND SHARP EDGES

IF IN DOUBT ASK

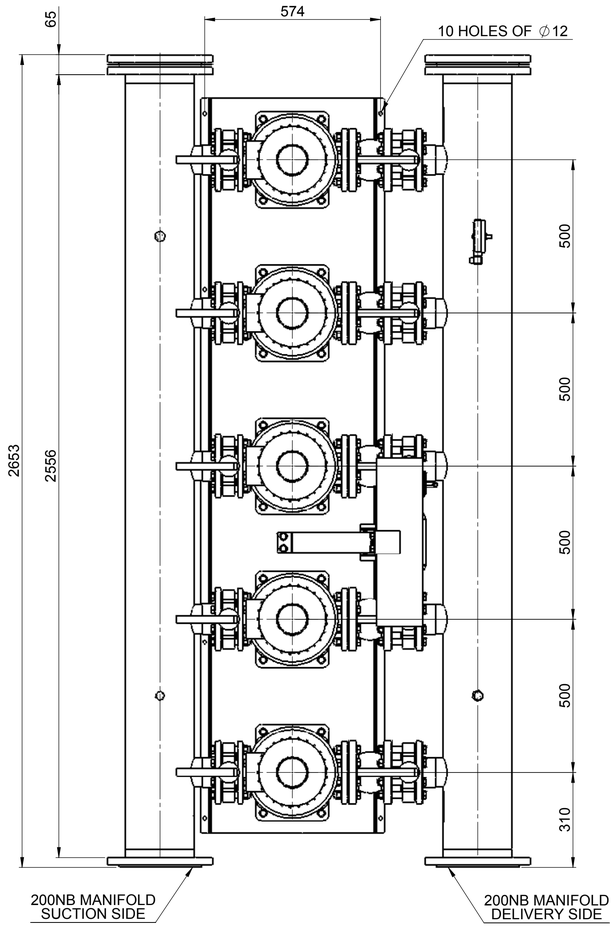

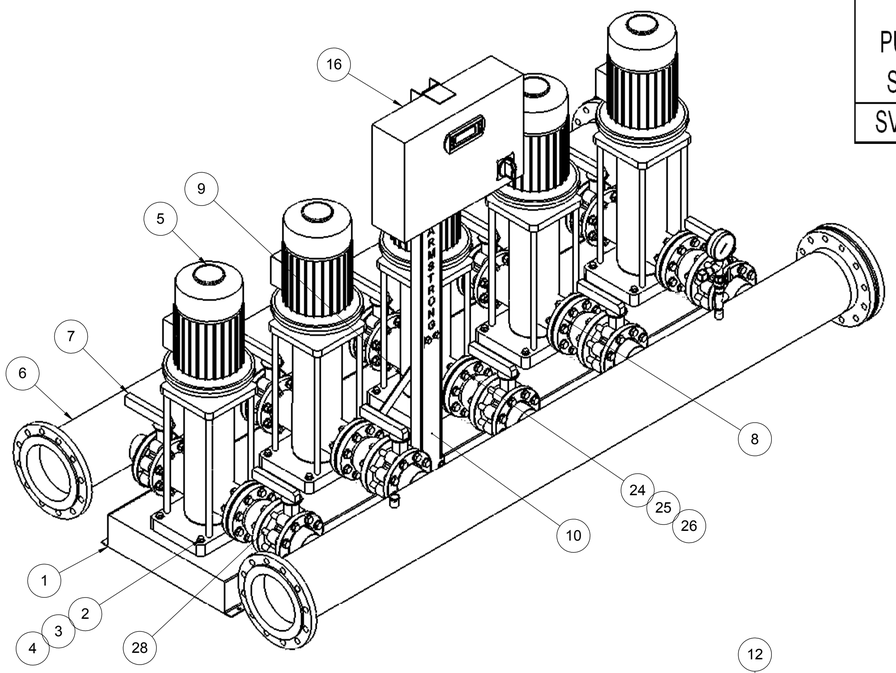

PUMP SIZE	MOTOR KW	FLC AMPS 3x415W	PUMP WEIGHT KGS	SET WEIGHT KGS	VESSEL SIZE LTRS	WORKING PRESSURE MAX BAR	TEST PRESSURE MAX. BAR	STARTING CURRENT	L MM
SV4601	4	8.5	80	885	60	2.6	24	20	901

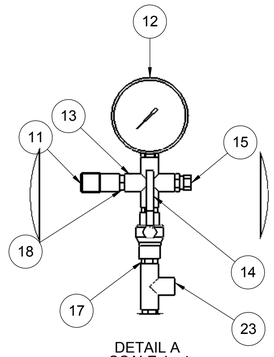

DETAIL A
SCALE 1 : 4

ANTI-VIBRATION MOUNTINGS OPTIONAL ONLY SUPPLIED WHEN ORDERED(6-PER SET K2092/10)

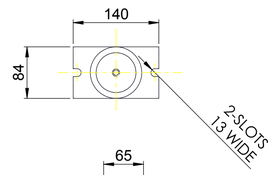

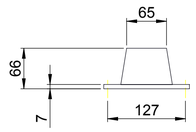

FLEXIBLE CONNECTORS OPTIONAL ONLY SUPPLIED WHEN ORDERED (2-PER SHEET)

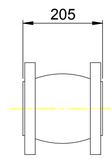

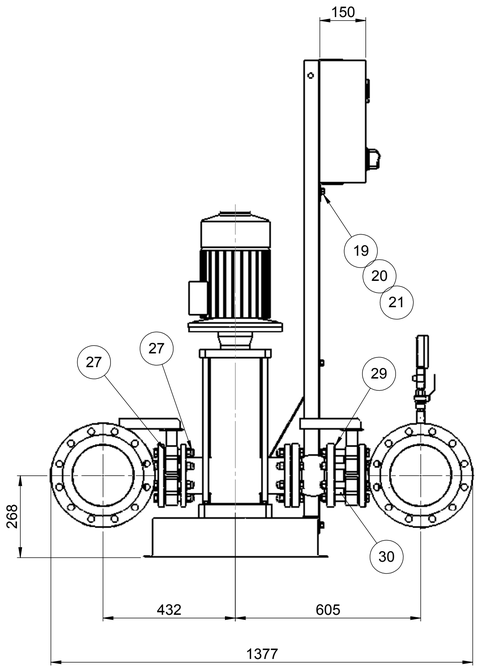

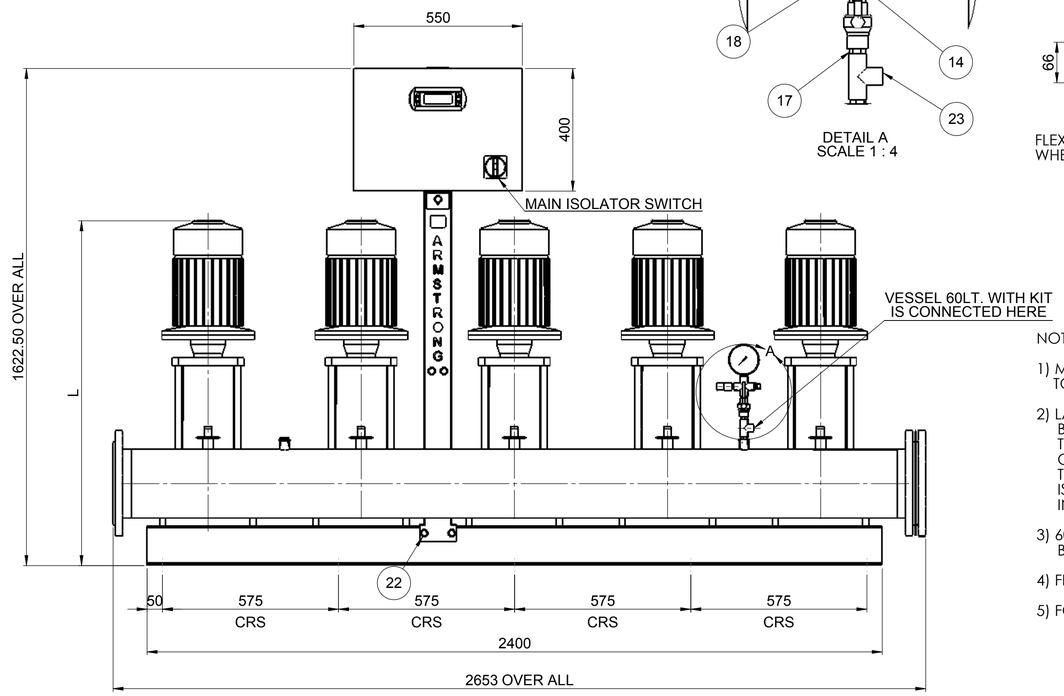

ITEM NO	DESCRIPTION	NO. OFF
1	BASE PLATE	1
2	BOLT - M12	20
3	WASHER - M12	20
4	CAGE NUT - M12	20
5	VMS PUMP	5
6	SUCTION/DISCHARGE MANIFOLD ASSY	2
7	ISOLATING VALVE 3"	10
8	NRV 3"	5
9	SUPPORT RIB	1
10	STANCHION	1
11	PRESSURE TRANSDUCER	1
12	PRESSURE GAUGE	1
13	FEMALE CROSS 1/2"	1
14	ISOLATING VALVE 1/2"	1
15	AIR VENT 1/4"	1
16	CONTROL PANEL	1
17	1/2" NIPPLE	3
18	1/2" x 1/4" REDUCING BUSH	3
19	BOLT - M10	9
20	WASHER - M10	9
21	NUT - M10	3
22	CAGE NUT - M10	6
23	1/2" T	1
FASTENERS FOR PN16		
24	BOLT - M16	40
25	WASHER - M16	240
26	NUT - M16	200
27	STUD - M16x54	120
28	STUD - M16x74	40
FASTENERS FOR PN25		
24	BOLT - M16	40
25	WASHER - M16	240
26	NUT - M16	200
27	STUD - M16x74	120
28	STUD - M16x84	40
29	GASKET - 80NB	10
30	SPACER PIECE - 80NB	5

NOTE:-

1) MAIN POWER SUPPLY TO PANEL MUST BE SIZED TO COVER ALL PUMPS RUNNING AT THE SAME TIME

2) LARGE STORAGE VESSELS, IF ORDERED, WILL BE SUPPLIED LOOSE FOR POSITIONING FOR CLIENT TO SUIT THE AVAILABLE FLOOR SPACE. CLIENT IS TO PROVIDE A CONNECTION FROM THE VESSEL TO THE DELIVERY PIPEWORK ADJACENT TO THE SET ISOLATING AND DRAIN VALVES SHOULD BE FITTED IN THIS CONNECTION

3) 60Lt TANK WILL BE SUPPLIED LOOSE AND SHOULD BE ASSEMBLED ON SITE

4) FLANGES ARE AVAILABLE BOTH IN 16 & 25 BAR VERSION

5) FOR STANCHION SELECTION USE DRAWING NO. PK14967

LAST MODIFICATION DETAILS

- - - - -

REV:	DATE: -	DRN BY: -	CHECKED BY: -	APP. BY: -

PROPRIETARY AND CONFIDENTIAL

THIS DRAWING IS THE PRIVATE AND CONFIDENTIAL PROPERTY OF ARMSTRONG. ALL COPYRIGHT, MANUFACTURING AND SALES RIGHTS RESERVED.

THIRD ANGLE PROJECTION

		NAME	DATE
PART No.	UNLESS OTHERWISE SPECIFIED: DIMENSIONS ARE IN mm		
JOB No.	WELD SYMBOLS TO BS 499 SURFACE FINISH SHOWN IN um.		
DESIGN No.	MACHINE WHERE SHOWN TO TOLERANCE ± 0.3	DRAWN	PRAKASH 05/03/08
PATTERN No.		CHECKED	
FILE NAME	DIMENSIONING AND TOLERANCING PER BS 308	Q.A.	
FINISH	MATERIAL	MFG APPR.	
	MATERIAL SPEC.	ENG APPR.	
		COMMENTS:	

DO NOT SCALE

DRAWING RELEASE LEVEL:

ARMSTRONG

TITLE: 6800 HMP SERIES 5PUMP SV46

SIZE A1 | DRG. NO. PX10762 | REV B

SCALE: 1:10 | WEIGHT: KG | SHEET 1 OF 1