DRG No. - PX10735

REMOVE BURRS AND SHARP EDGES

IF IN DOUBT ASK

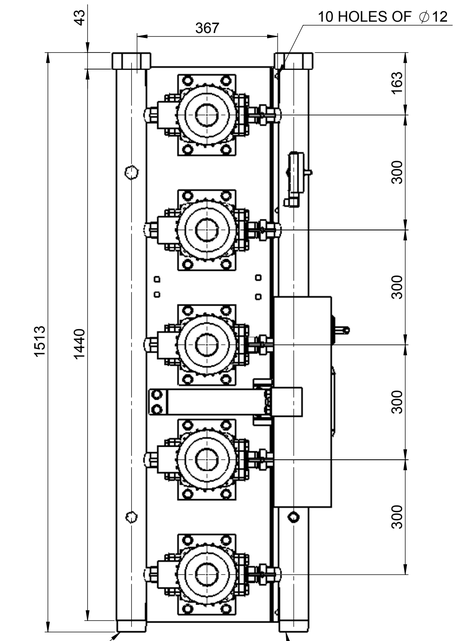

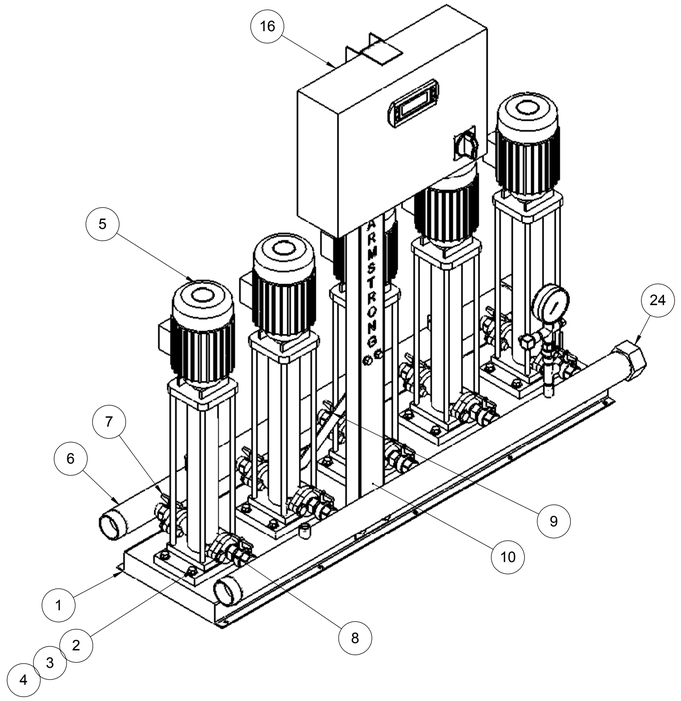

PUMP SIZE	MOTOR KW	FLC AMPS 3x415W	PUMP WEIGHT KGS	SET WEIGHT KGS	VESSEL SIZE LTRS	WORKING PRESSURE MAX BAR	TEST PRESSURE MAX BAR	STARTING CURRENT	L MM	A MM	B MM
SV0202	0.55	1.5	17.5	166	60	2.2	24	4	559	197	227
SV0203	0.55	1.5	18	167	60	3.1	24	4	584	197	227
SV0204	0.55	1.5	19	169	60	4.2	24	4	621	197	227
SV0205	0.55	1.5	21.5	174	60	5.3	24	4	661	197	227
SV0206	0.75	1.9	22	175	60	6.3	24	6	686	197	227
SV0207	0.75	1.9	23	177	60	7.4	24	6	748	197	227
SV0208	1.1	2.6	23.5	178	60	8.4	24	6	773	197	227
SV0209	1.1	2.6	24	179	60	9.4	24	6	798	197	227
SV0211	1.1	2.6	31	193	60	11.5	24	6	858	197	227
SV0212	1.5	3.6	31.5	194	60	12.6	24	6	883	197	227

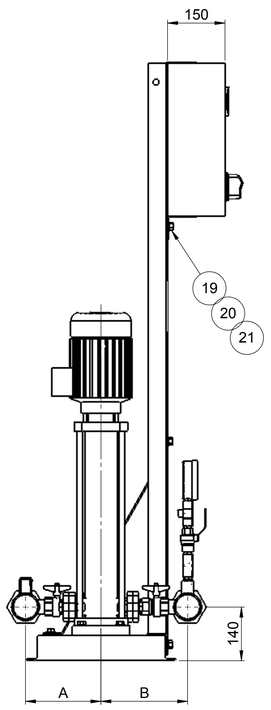

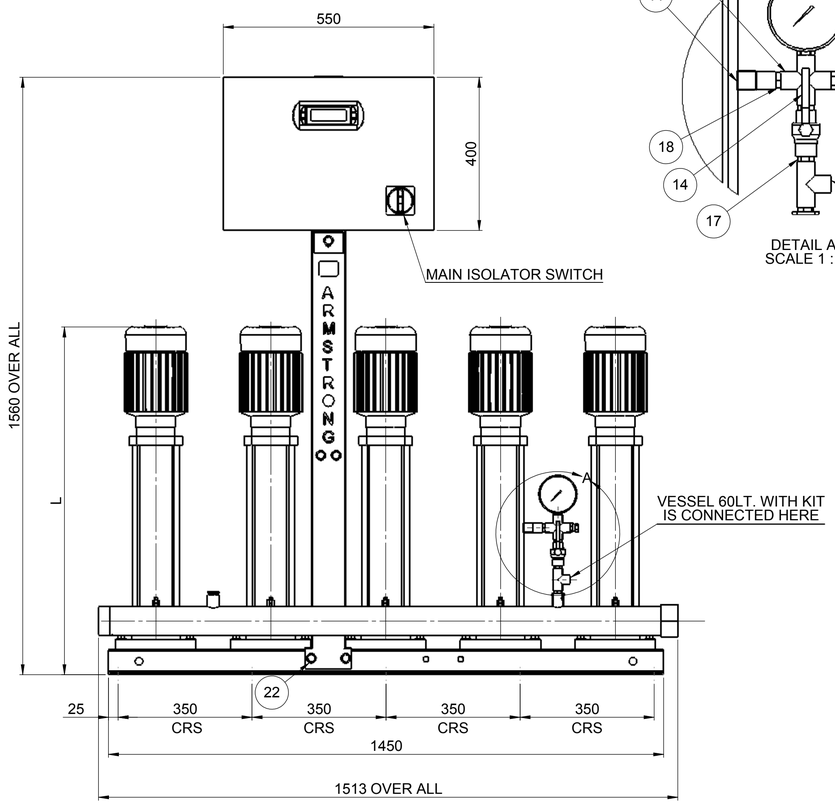

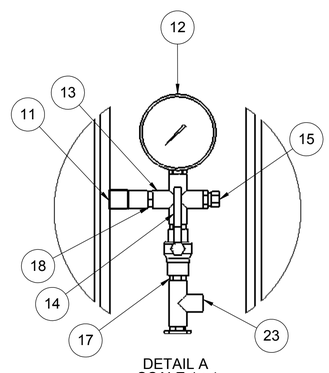

DETAIL A
SCALE 1 : 4

ANTI-VIBRATION MOUNTINGS OPTIONAL ONLY SUPPLIED WHEN ORDERED(4-PER SET K2092/10)

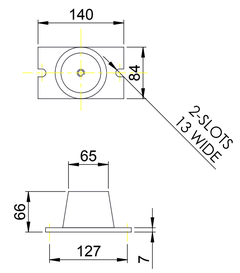

FLEXIBLE CONNECTORS OPTIONAL ONLY SUPPLIED WHEN ORDERED (2-PER SHEET)

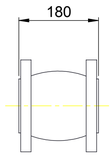

NOTE:-

1) MAIN POWER SUPPLY TO PANEL MUST BE SIZED TO COVER ALL PUMPS RUNNING AT THE SAME TIME

2) LARGE STORAGE VESSELS, IF ORDERED, WILL BE SUPPLIED LOOSE FOR POSITIONING FOR CLIENT TO SUIT THE AVAILABLE FLOOR SPACE. CLIENT IS TO PROVIDE A CONNECTION FROM THE VESSEL TO THE DELIVERY PIPEWORK ADJACENT TO THE SET ISOLATING AND DRAIN VALVES SHOULD BE FITTED IN THIS CONNECTION

3) 60Lt TANK WILL BE SUPPLIED LOOSE AND SHOULD BE ASSEMBLED ON SITE

4) FLANGES ARE AVAILABLE BOTH IN 16 & 25 BAR VERSION

5) FOR STANCHION SELECTION USE DRAWING NO. PK14967

ITEM NO	DESCRIPTION	NO. OFF
1	BASE PLATE	1
2	BOLT - M12	20
3	WASHER - M12	20
4	CAGE NUT - M12	20
5	VMS PUMP	5
6	SUCTION/DISCHARGE MANIFOLD ASSY	2
7	ISOLATING VALVE 1"	10
8	NRV 1"	5
9	SUPPORT RIB	1
10	STANCHION	1
11	PRESSURE TRANSDUCER	1
12	PRESSURE GAUGE	1
13	FEMALE CROSS 1/2"	1
14	ISOLATING VALVE 1/2"	1
15	AIR VENT 1/4"	1
16	CONTROL PANEL	1
17	1/2" NIPPLE	3
18	1/2" x 1/4" REDUCING BUSH	3
19	BOLT - M10	9
20	WASHER - M10	9
21	NUT - M10	3
22	CAGE NUT - M10	6
23	1/2" T	1
24	END CAP	2

LAST MODIFICATION DETAILS

REV: | DATE: - | DRN BY: - | CHECKED BY: - | APP. BY: -

PROPRIETARY AND CONFIDENTIAL

THIS DRAWING IS THE PRIVATE AND CONFIDENTIAL PROPERTY OF ARMSTRONG ALL COPYRIGHT, MANUFACTURING AND SALES RIGHTS RESERVED.

THIRD ANGLE PROJECTION

	NAME	DATE
DRAWN	PRAKASH	05/03/08
CHECKED		
Q.A.		
MFG APPR.		
ENG APPR.		

PART No. | JOB No. | DESIGN No. | PATTERN No. | FILE NAME | FINISH

UNLESS OTHERWISE SPECIFIED: DIMENSIONS ARE IN mm; WELD SYMBOLS TO BS 499; SURFACE FINISH SHOWN IN um; MACHINE WHERE SHOWN ▽ TO TOLERANCE ± 0.3; DIMENSIONING AND TOLERANCING PER BS 308; MATERIAL; MATERIAL SPEC.

COMMENTS:

DO NOT SCALE

DRAWING RELEASE LEVEL:

ARMSTRONG

TITLE: 6800 HMP SERIES 5PUMP SV02

SIZE A1 | DRG. NO. PX10735 | REV B

SCALE: 1:8 | WEIGHT: KG | SHEET 1 OF 1