ARMSTRONG

FILE NO:	F51.830
DATE:	Aug. 15, 2005
SUPERSEDES:	F51.500
DATE:	Jan. 6, 2004

Vertical Turbine Fire Pump - Sectional Arrangement Drawing

ELECTRIC OR DIESEL

FM Approved

c UL us

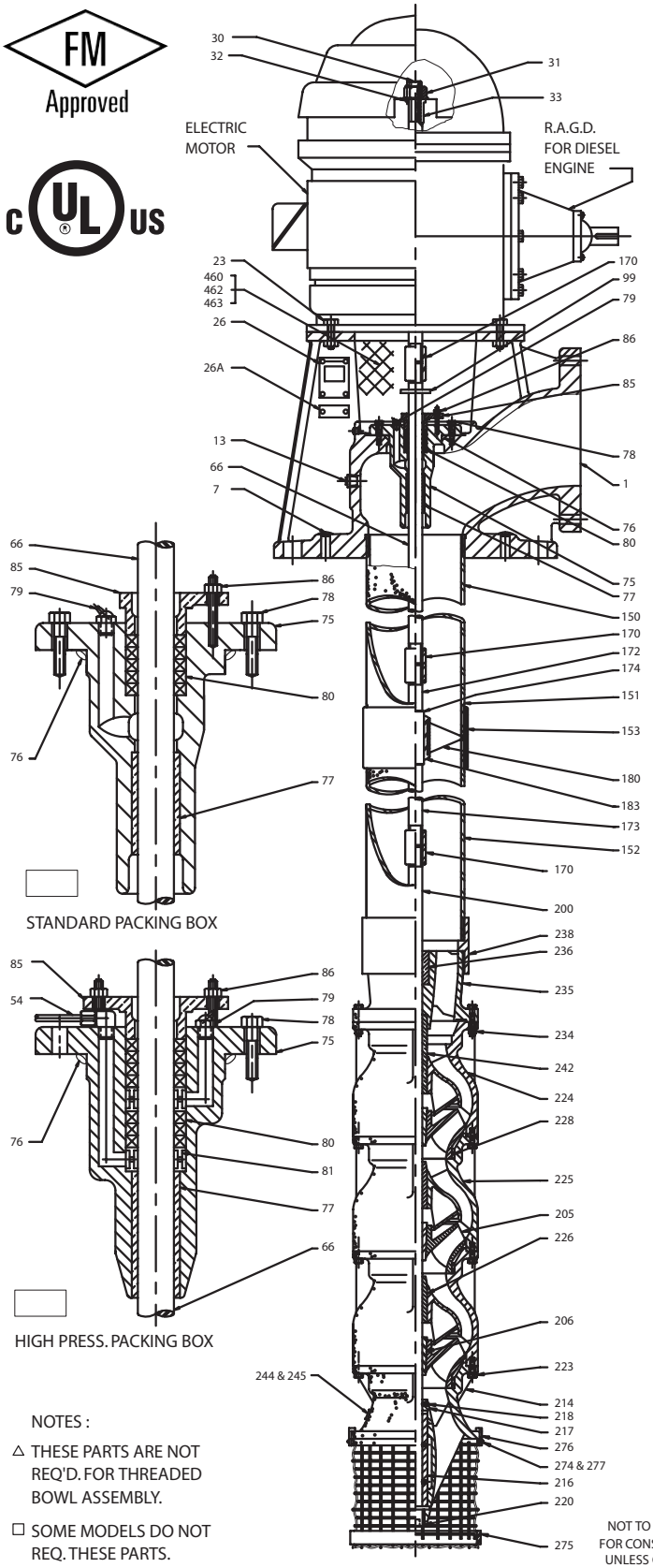

☐ FM ☐ UL ☐ NFPA-20 ONLY

REF. NO.	PART	MATERIAL
1	DISCHARGE HEAD	A 48-CL.30 C.I.
7	SNAP PLUGS	PLT. STEEL
13	PIPE PLUG	STEEL
23	DRIVER BOLTS & NUTS	STEEL
26	NAMEPLATE WITH DRIVER SCREWS	STAINLESS STEEL
26A	WARNING NAMEPLATE WITH DRIVER SCREWS	STAINLESS STEEL
30	HEAD SHAFT	A 582-416 S.S.
31	HEAD SHAFT NUT	B 584-838 BRZ.
32	HEAD SHAFT NUT LOCK SCREW	STEEL
33	GIB KEY	1020 STEEL
54	BY-PASS LINE WITH FITTINGS	COPPER
66	TOP LINE SHAFT	A 582-416 S.S.
75	STUFFING BOX	A 48-CL.30 C.I.
76	STUFFING BOX "O" RING	BUNA N
77	STUFFING BOX BEARING	B 505-932 BRZ.
78	STUFFING BOX CAP SCREWS	STEEL
79	GREASE ZERK WITH COVER	STEEL
80	PACKING RINGS	J.C. 1340
81	LANTERN RING	B 584-932 BRZ.
85	PACKING GLAND	B 584-838 BRZ.
86	PACKING GLAND STUDS & NUTS	303 S.S.
99	SLINGER	NEOPRENE
150	TOP COLUMN PIPE	A 53 GR.B
151	INTERMEDIATE COLUMN PIPE	A 53 GR.B
152	BOTTOM COLUMN PIPE	A 53 GR.B
153	COLUMN PIPE COUPLING	A 53 GR.B
170	LINE SHAFT COUPLING	A 108-1215 STL.
172	INTERMEDIATE LINE SHAFT	A 108 GR. 1045 STL.
173	BOTTOM LINE SHAFT	A 108 GR. 1045 STL.
174	LINE SHAFT SLEEVE	304 S.S.
180	BEARING RETAINER	A536-GR60 D.I.
183	LINE SHAFT BEARING	NEOPRENE
200	BOWL SHAFT	A 582-416 S.S.
205	IMPELLER	B 584-838 BRZ.
206	IMPELLER COLLET	A 108-1215 STL.
214	SUCTION BELL	A 48-CL. 30 C.I.
216	SUCTION BELL BEARING	B 505-932 BRZ.
217	SAND COLLAR	B 584-838 BRZ.
218	COLLAR SET SCREW	303 S.S.
220	PIPE PLUG (BELL)	A 48-CL. 30 C.I.
△ 223	BOWL CAP SCREWS SET	A 449 GR.5 STEEL
224	TOP BOWL	A 48-CL.30 C.I.E./C.I.
225	INTERMEDIATE BOWL	A 48-CL.30 C.I.E./C.I.
226	BOWL BEARING	B 505-932 BRZ.
228	BOWL WEAR RING	B 505-943/954 BRZ.
△ 234	DISCHARGE CASE CAP SCREWS SET	A 449 GR.5 STEEL
☐ 235	DISCHARGE CASE	A 48-CL. 30 C.I.
☐ 236	DISCHARGE CASE BEARING	B 505-932 BRZ.
☐ 238	COLUMN ADAPTOR	A 48-CL. 30 C.I.
☐ 242	THROTTLE BEARING	B 505-844 BRZ.
244	BOWL NAMEPLATE	BRASS
245	NAMEPLATE DRIVER SCREWS	NIC PLT STEEL
274	STRAINER LOCK WASHERS	410 S.S.
275	STRAINER	RED BRASS
276	STRAINER CLIPS	316 S.S.
277	STRAINER SCREWS	303 S.S.
460	COUPLING GUARDS	GALV. STEEL
462	COUPLING GUARD CAP SCREWS	PLTD STEEL
463	COUPLING GUARD WASHERS	GR. A STEEL

JOB NAME. _____

ITEM NO. _____

CUSTOMER _____

ORDER NO. _____

MFG. REP. _____

DWG. NO. _____

SERIAL NO. _____

By : _____ Date : _____

NOTES :

△ THESE PARTS ARE NOT REQ'D. FOR THREADED BOWL ASSEMBLY.

☐ SOME MODELS DO NOT REQ. THESE PARTS.

NOT TO BE USED FOR CONSTRUCTION UNLESS CERTIFIED

FPSECA02 (REV.#3)

© S.A. Armstrong Limited 2005